RASPBERRY PI EXPERIMENTAL

FOREVER MACHINES

A small box that plays strange little machines.

A Raspberry Pi Zero 2 W, a 7-inch touch screen and a Bluetooth speaker. It starts straight into Forever Machines, plays the whole collection and fetches the new machine every Monday.



THE PARTS, AND HOW THEY CONNECT

YOU HAVE

- ✓ Raspberry Pi Zero 2 W
- ✓ 7-inch HDMI touch screen
  with its HDMI and USB touch connectors
- ✓ 5 V power bank, two USB outputs
  at least 2 A each
- ✓ mini-HDMI to HDMI cable or adapter
- ✓ Two micro-USB power cables

ADD THESE

- + Micro-USB OTG adapter
  micro-USB male to USB-A female
- + The screen's touch cable
  usually in the box: USB-A to micro-USB
- + microSD card, 16 GB or more
- + Bluetooth speaker
  any one

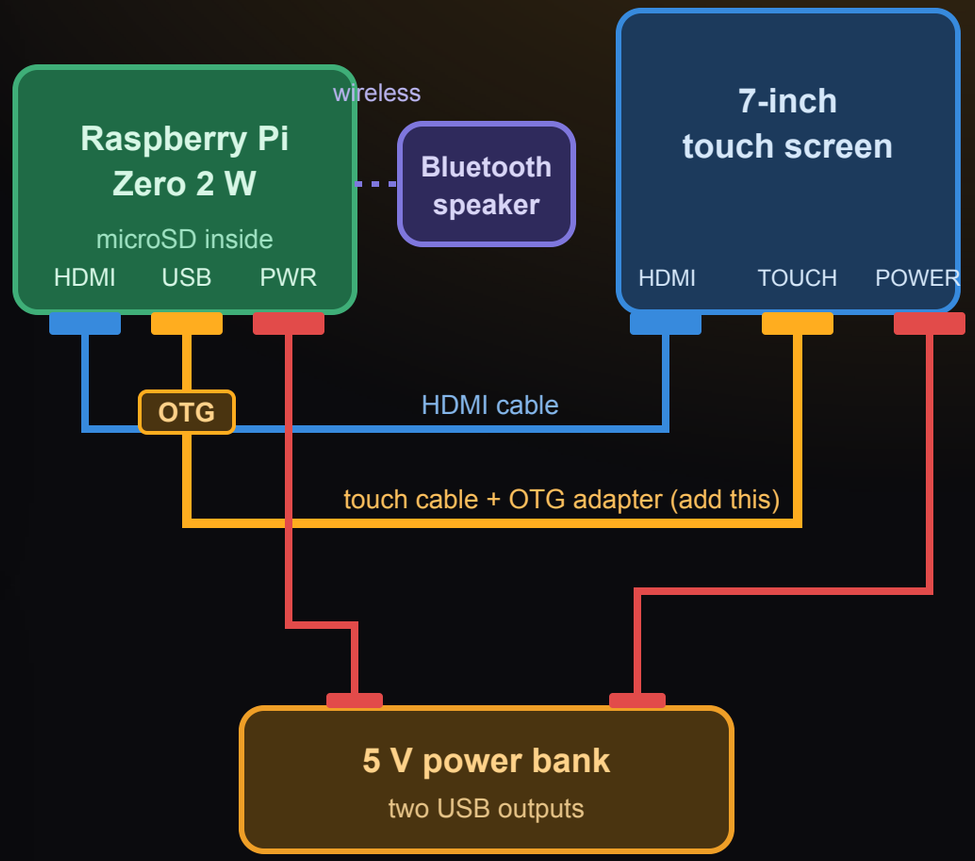

THREE PORTS, THREE CABLES



1. `mini-HDMI` to the screen's **HDMI IN**.
2. `USB` to the screen's **TOUCH**, through the OTG adapter.
3. `PWR IN` to the power bank. The screen's **POWER** goes to the power bank too.

WHY TWO MICRO-USB PORTS?

PWR IN only brings power. The port marked **USB** carries data, so the touch has to go there. The adapter turns it into a normal USB-A socket for the screen's touch cable.

CHECK THE TOUCH

Once the Pi is running (step 05), over SSH:

```
sudo libinput list-devices | grep -i -A4 touch
sudo libinput debug-events
```

Touch the screen: lines appear. Touches in the wrong place? The screen is rotated or reports another size: tell us the model.

PUT IT ON THE CARD

1. **Raspberry Pi Imager** (free, from raspberrypi.com) on your computer: Windows, Mac or Linux. Put the microSD card in.
2. **Choose the system:** Raspberry Pi OS (other), **Raspberry Pi OS Lite (64-bit)**.
3. **Edit the settings** before writing, as on the right: a hostname, a user, your Wi-Fi and SSH on.
4. **Write**, put the card in the Pi and plug in the power. The first start takes a few minutes.

Operating system	**Raspberry Pi OS Lite (64-bit)**
Hostname	**fm**
Username	**fm**
Password	**(one you choose)**
Wi-Fi	**your network and password**
Services	**Enable SSH**

Use the names **fm** in the Imager and the commands on the next pages work as they are. Other names? Change `fm@fm.local` to yours.

COMPUTER TO PI, TWO STEPS

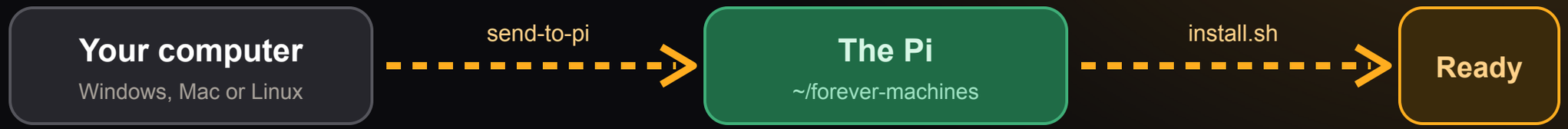

ON YOUR COMPUTER

Unzip the download and open a terminal in that folder:

Mac, Linux	`sh send-to-pi.sh fm@fm.local`
Windows	`.\send-to-pi.cmd fm@fm.local` in PowerShell: Windows 10 and 11 have the SSH tools built in

ON THE PI

Log in over SSH (the same command works on every system) and install, once (a few minutes):

```
ssh fm@fm.local
cd ~/forever-machines
bash install.sh
```

No terminal on your computer? After step 03 the card shows up as a drive called **bootfs**. Copy the unzipped folder onto it. On the Pi (a keyboard, or SSH from anywhere) type `cp -r /boot/firmware/Forever-Machines-Raspberry-Pi ~/forever-machines`, then the install lines above. If `fm.local` is not found, use the Pi's address from your router.

The install adds Chromium, Node and Bluetooth sound, signs in by itself and starts Forever Machines at every power-on.

PAIR THE SPEAKER, START

1. **Put the speaker in pairing mode** (usually: hold its Bluetooth button until it blinks).

2. **On the Pi** (SSH), once:

```
bash pair-speaker.sh
```

3. It lists what it finds. **Type the number** of your speaker. It pairs, trusts it and remembers it.

4. **Reboot:** `sudo reboot`. The screen shows the Forever Machines tour and the speaker connects by itself, now and at every start.

BLUETOOTH IS A LITTLE LATE

Over Bluetooth the sound arrives about **0.2 seconds** after you touch the screen: the Zero 2 W has no faster codec. Machines that play by themselves, and layers, are fine. Playing live feels laggy. A USB sound card or an I2S DAC board has no delay.

ONE RADIO

Wi-Fi and Bluetooth share it on the Zero 2 W, so a download can make the speaker stutter. It looks for new machines once, 20 seconds after it starts. For a gig turn that off: `FM_UPDATE=off`.

LOW MEMORY MODE

The Zero 2 W has 512 MB, little for a browser. On any board under 1 GB, Forever Machines switches on a **low memory mode** by itself.

WHAT IT CHANGES

The page	no grid of miniatures, two locked machines (not five), drawing at 30 frames a second, 32 voices
Chromium	fewer processes, a smaller heap, nothing running in the background
Memory	compressed swap (zram) plus a 256 MB swap file

Keep to one or two machines at a time. The sample and camera machines are the hungriest.

SETTINGS

One line each in `~/.config/forever-machines/env` on the Pi:

`FM_LOW=1`	low memory mode on (`0`: off)
`FM_UPDATE=off`	never look for new machines
`FM_SOFTWARE=1`	Chromium without the GPU, if the picture glitches
`FM_MEMLOG=1`	log the free memory and the load every 30 s

WHEN SOMETHING IS WRONG

TRY THIS

Black screen	wait a minute after power-on; check the HDMI is in the Pi's **mini-HDMI** port
Wrong size	add `video=HDMI-A-1:1024x600@60` to the line in `/boot/firmware/cmdline.txt`
No touch	the touch cable goes through the OTG adapter into **USB**, not PWR IN
No sound	`pactl list short sinks` should list `bluez_output`; pair again
"Too heavy for this Pi"	that machine draws too many pictures for a Zero 2 W; Next machine, or **Try anyway**. A Pi 4 or 5 plays them all
Game controller	plug it into a small USB **OTG hub** (with the touch cable); **Menu** switches Navigate / Play, **View + Menu** shows the controls
Crackling	fewer machines; give a machine half a

LOOK INSIDE

Logs	`~/.config/forever-machines/kiosk.log` and `host.log`
Leave the kiosk	SSH in and `pkill cage`, or `Ctrl` `Alt` `F2`
Run it by hand	`bash ~/forever-machines/kiosk.sh`

Experimental. This is new and has only a first run behind it. If something does not work, tell us what you see: the Discord is on forevermachines.net.